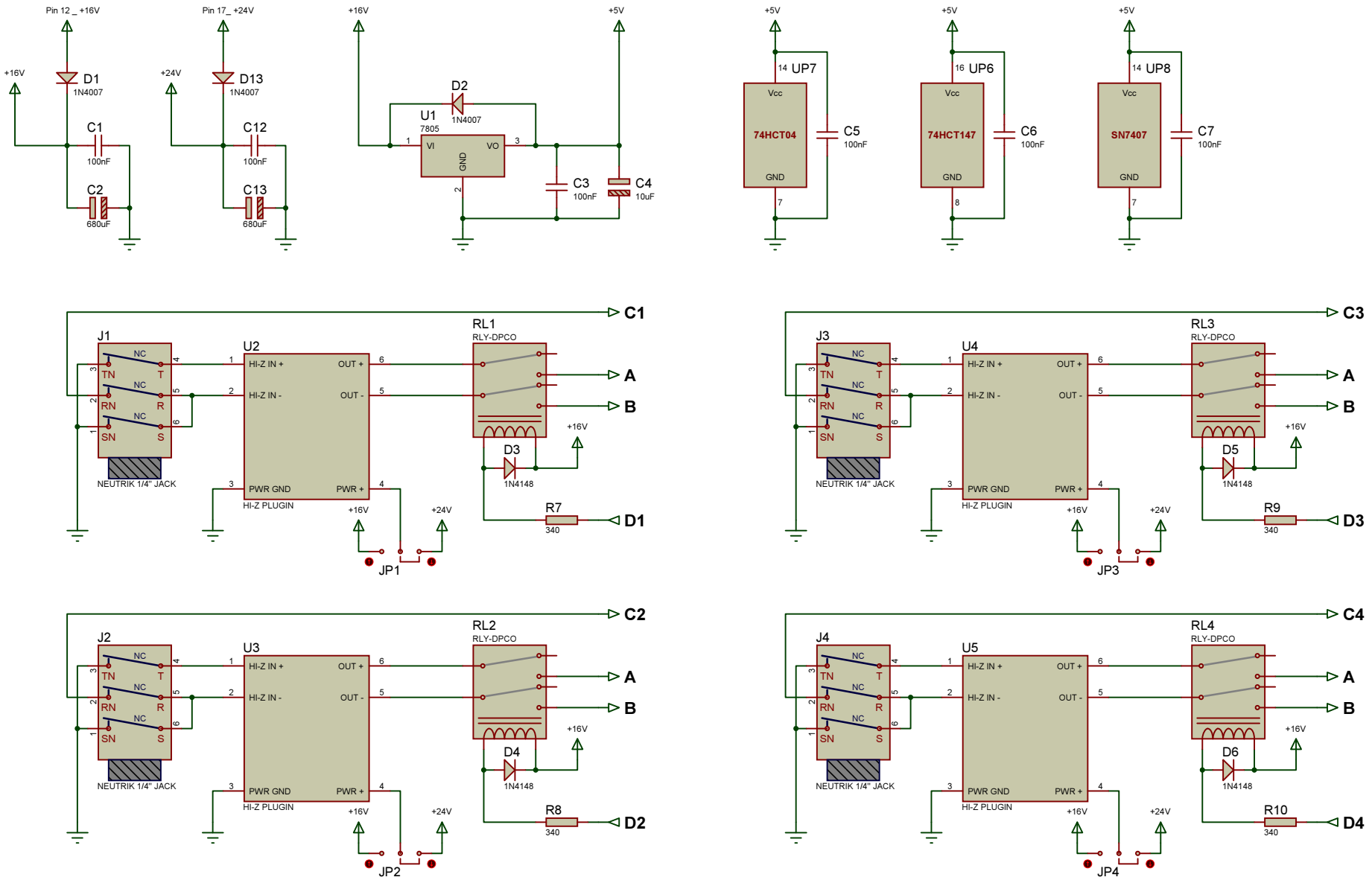

TITLE:	DATE:
HZ51X Module Power and input sections	11/06/10
BY: Michael Lebon REV: 1.0	PAGE: 1/2

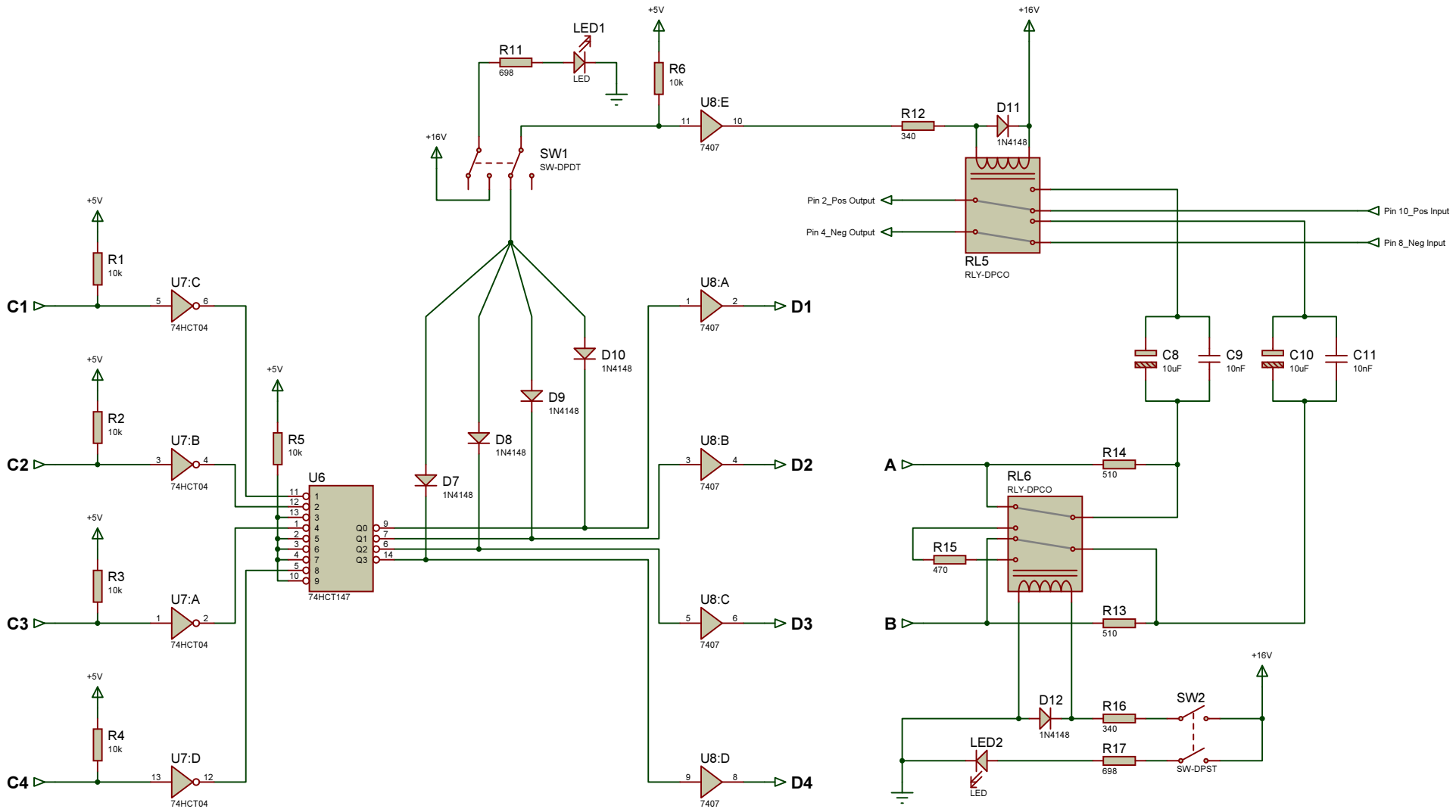

TITLE:	DATE:
HZ51X Module Logic and output sections	11/06/10
BY: Michael Lebon REV: 1.0	PAGE: 2/2